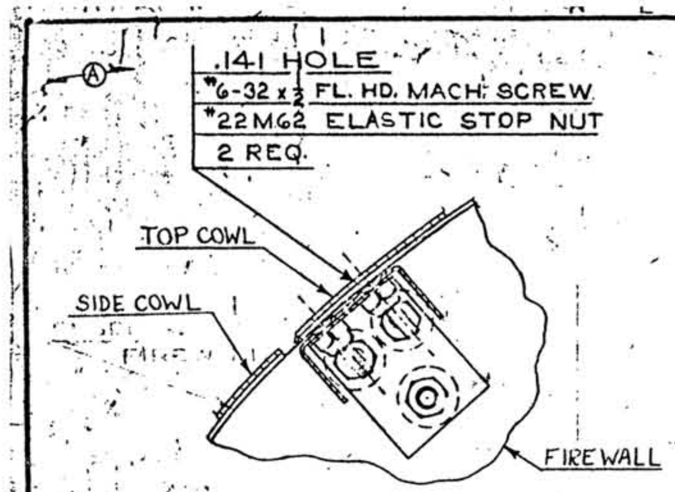
.141 HOLE
*6-32 x 1/2 FL. HD. MACH. SCREW
*22M62 ELASTIC STOP NUT
2 REQ.
TOP COWL
SIDE COWL
FIREWALL

SECTION A-A
FULL SIZE

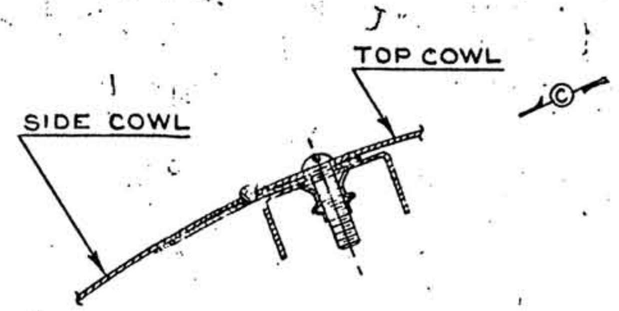
TOP COWL
SIDE COWL

SECTION B-B
FULL SIZE

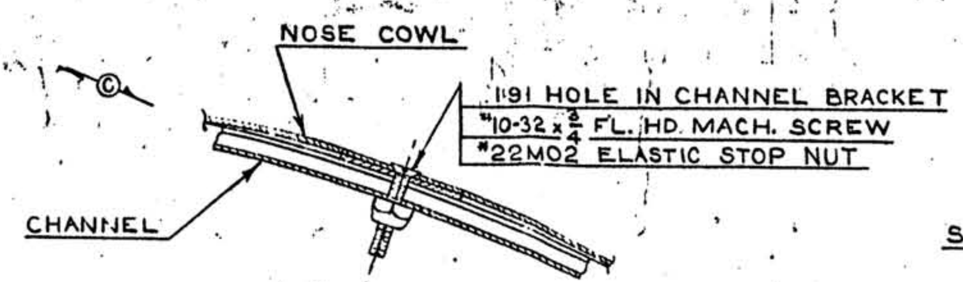
NOSE COWL
.191 HOLE IN CHANNEL BRACKET
*10-32 x 3/4 FL. HD. MACH. SCREW
*22M02 ELASTIC STOP NUT
CHANNEL

SECTION C-C
FULL SIZE

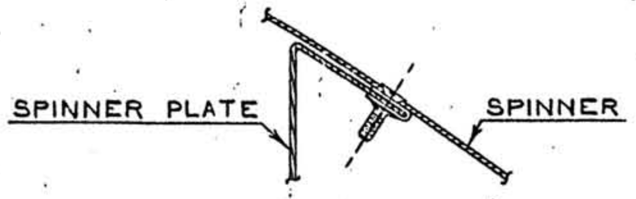
SPINNER PLATE
SPINNER

SECTION D-D
FULL SIZE

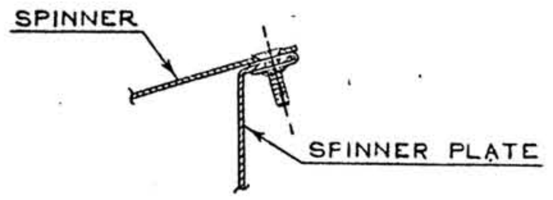
SPINNER
SPINNER PLATE

SECTION E-E
FULL SIZE

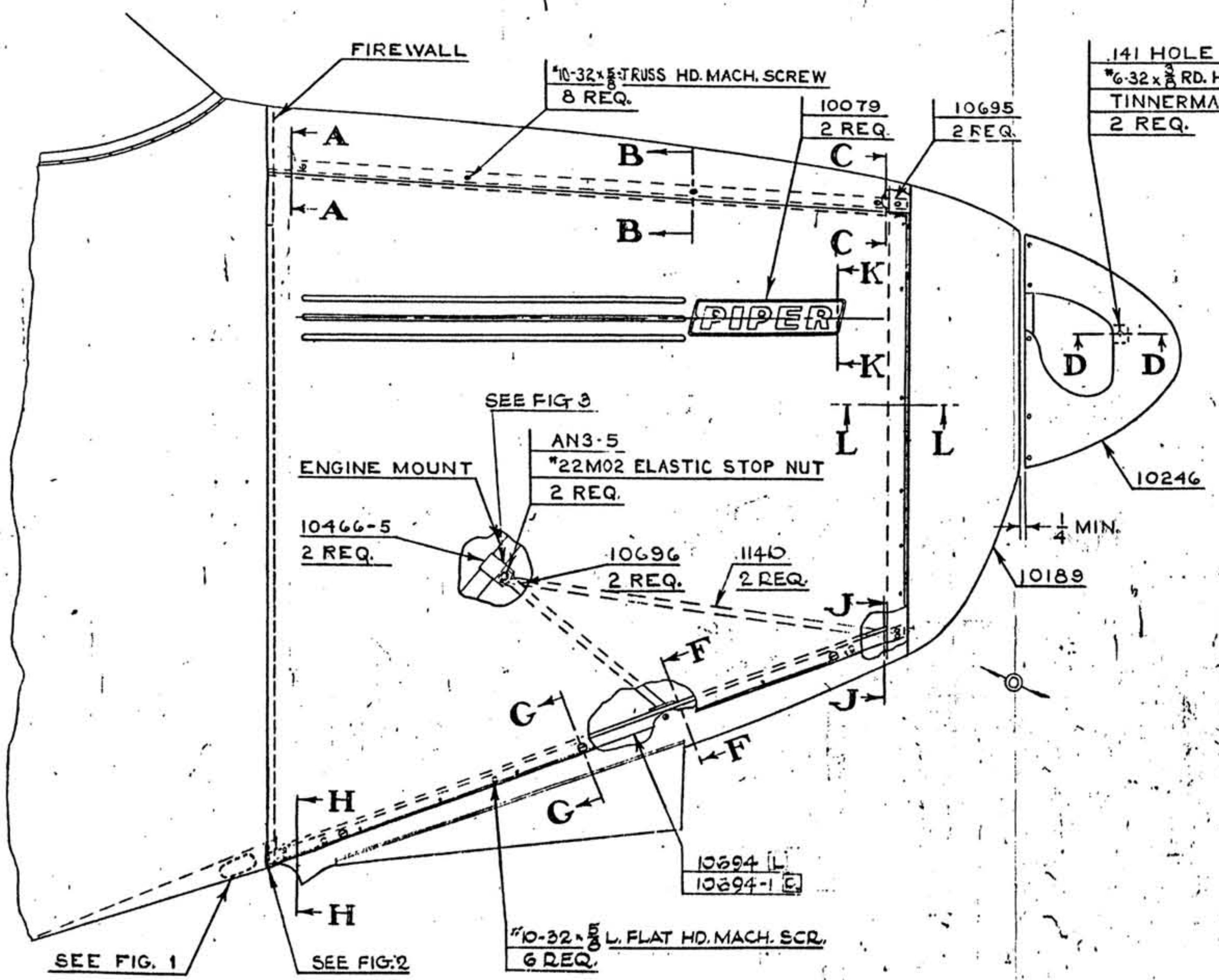
FIREWALL
*10-32 x 5/8 TRUSS HD. MACH. SCREW
8 REQ.
10079
2 REQ.
10695
2 REQ.
.141 HOLE THRU
*6-32 x 3/8 RD. HD. MACH. SCREW
TINNERMAN NUT *A880-632-1
2 REQ.
A
B
C
K
D
L
J
F
G
H
PIPER
SEE FIG 3
AN3-5
*22M02 ELASTIC STOP NUT
2 REQ.
ENGINE MOUNT
10466-5
2 REQ.
10696
2 REQ.
11410
2 REQ.
10246
1/4 MIN.
10189
10894 L
10894-1 R
*10-32 x 5/8 L. FLAT HD. MACH. SCR.
6 REQ.
SEE FIG. 1
SEE FIG. 2

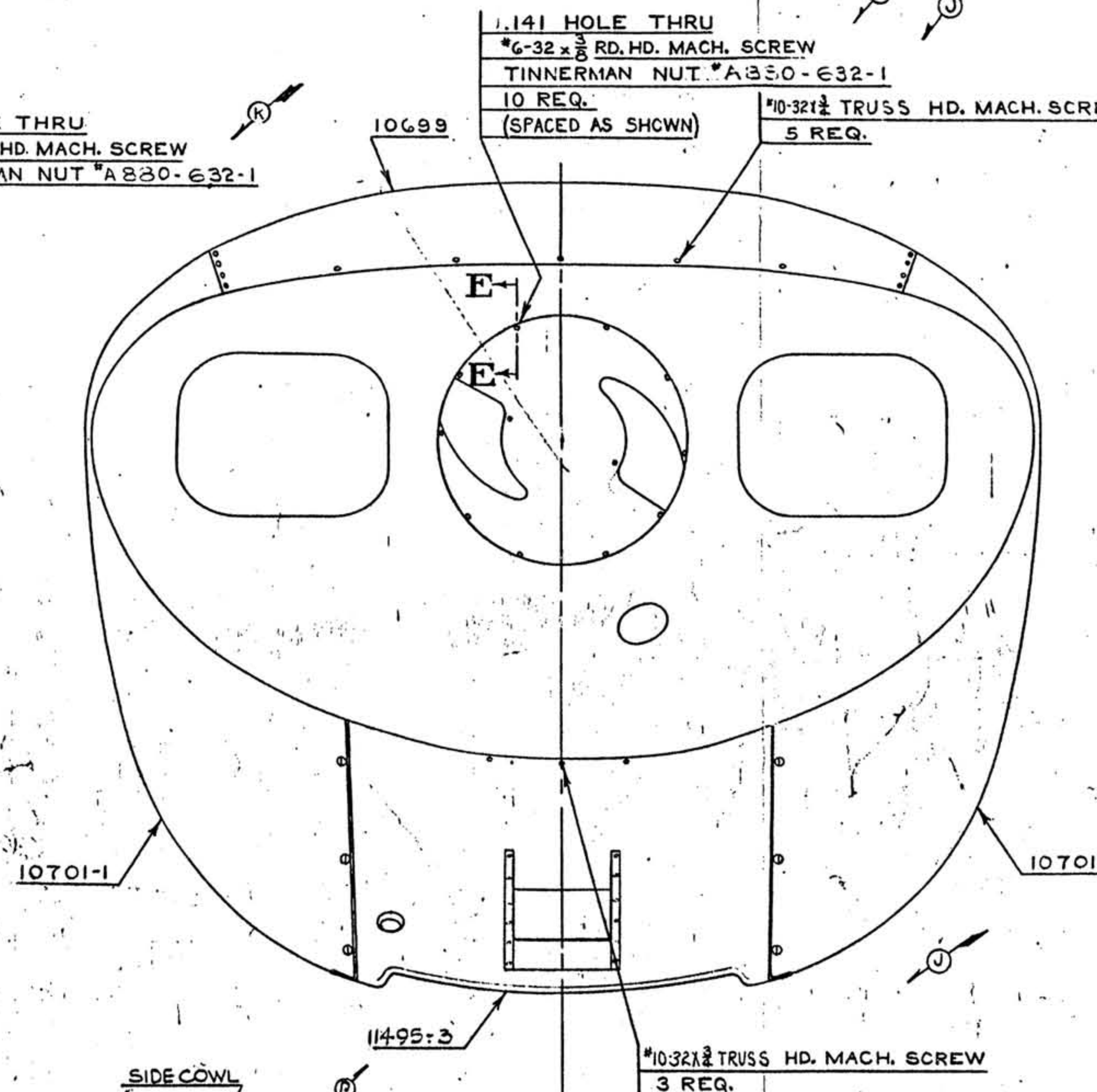
.141 HOLE THRU
*6-32 x 3/8 RD. HD. MACH. SCREW
TINNERMAN NUT *A880-632-1
10 REQ.
(SPACED AS SHOWN)
*10-32 x 3/4 TRUSS HD. MACH. SCREW
5 REQ.
10699
E
10701-1
10701
11495-3
*10-32 x 3/4 TRUSS HD. MACH. SCREW
3 REQ.

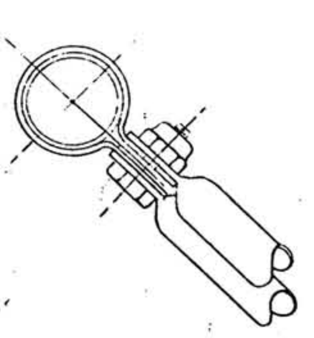

FIG. 3
TUBE ATTACH
FULL SIZE

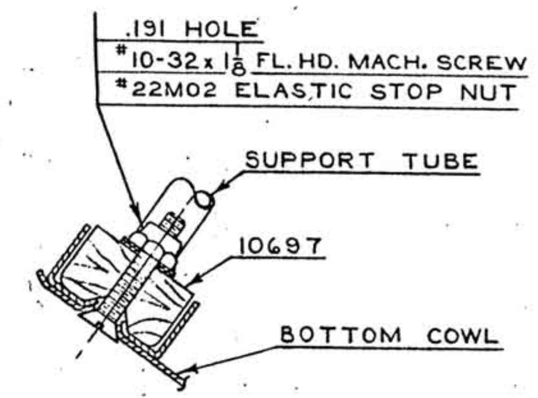
.191 HOLE
*10-32 x 1 1/8 FL. HD. MACH. SCREW
*22M02 ELASTIC STOP NUT
SUPPORT TUBE
10697
BOTTOM COWL

SECTION F-F
FULL SIZE

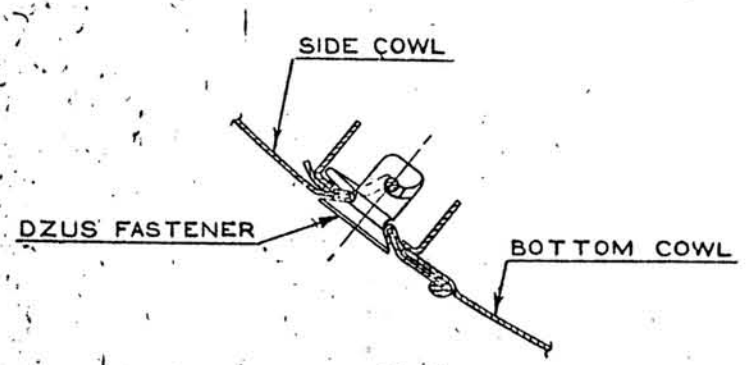
SIDE COWL
DZUS FASTENER
BOTTOM COWL

SECTION G-G
FULL SIZE

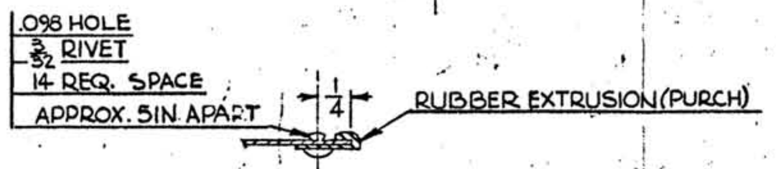
.098 HOLE
3/32 RIVET
14 REQ. SPACE
APPROX. 5 IN APART
1/4
RUBBER EXTRUSION (PURCH)

SECTION L-L
FULL SIZE

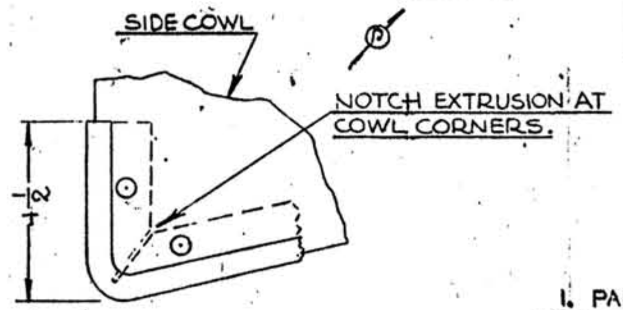
SIDE COWL
NOTCH EXTRUSION AT
COWL CORNERS.
1/2

FIG. 2
CORNER DETAIL
FULL SIZE

NOTES

1. PARTS MARKED L USED ON LEFT SIDE ONLY.
   PARTS MARKED R USED ON RIGHT SIDE ONLY.
2. 1/2 IN. MAX. CLEARANCE BETWEEN THE PROPELLER BLADES & THE NOSE COWL AT THE INBOARD EDGE OF THE COOLING INLET OPENINGS.

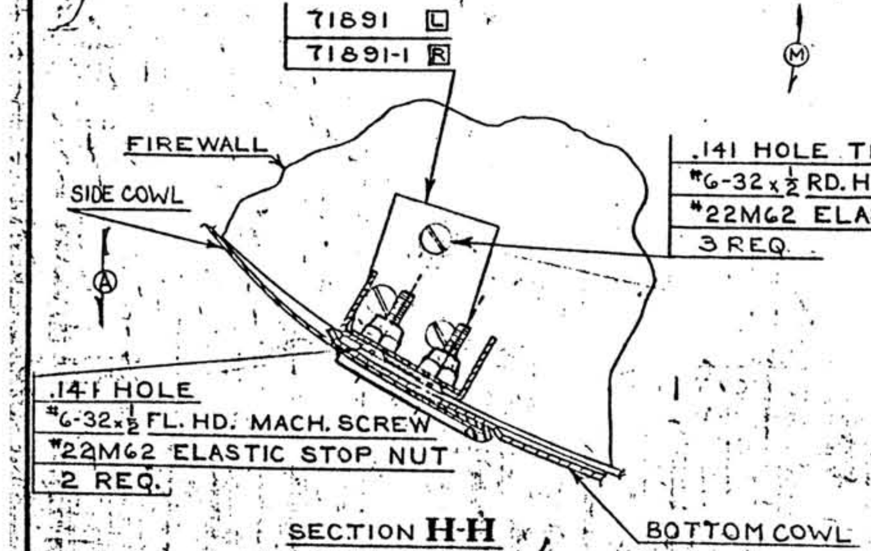
71891 L
71891-1 R
FIREWALL
SIDE COWL
.141 HOLE THRU
*6-32 x 1/2 RD. HD. MACH. SCREW
*22M62 ELASTIC STOP NUT
3 REQ.
.141 HOLE
*6-32 x 1/2 FL. HD. MACH. SCREW
*22M62 ELASTIC STOP NUT
2 REQ.
BOTTOM COWL

SECTION H-H
FULL SIZE

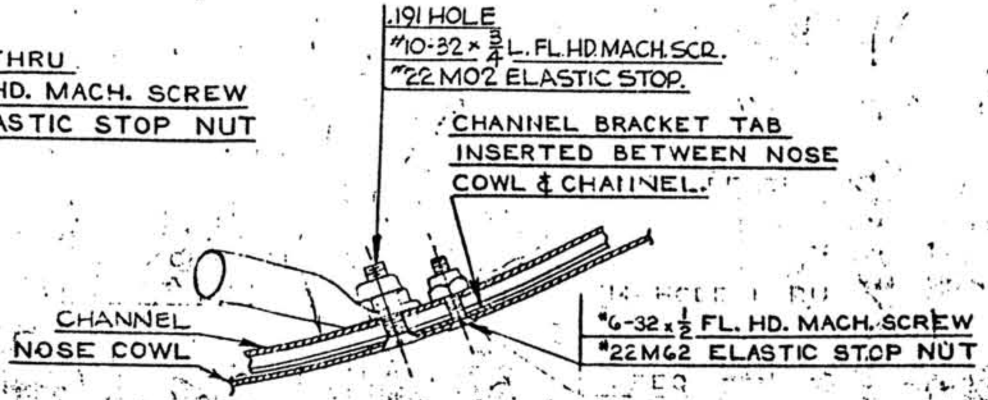
.191 HOLE
*10-32 x 3/4 L. FL. HD. MACH. SCR.
*22M02 ELASTIC STOP.
CHANNEL BRACKET TAB
INSERTED BETWEEN NOSE
COWL & CHANNEL.
CHANNEL
NOSE COWL
*6-32 x 1/2 FL. HD. MACH. SCREW
*22M62 ELASTIC STOP NUT

SECTION J-J
FULL SIZE

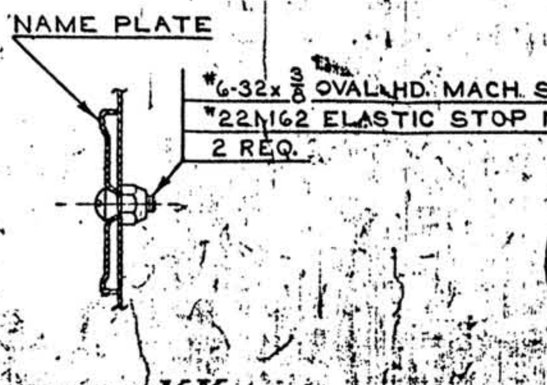
NAME PLATE
*6-32 x 3/8 OVAL HD. MACH. SCREW
*22M62 ELASTIC STOP NUT
2 REQ.

SECTION K-K
FULL SIZE

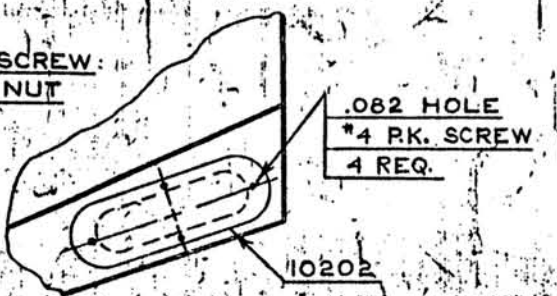
.082 HOLE
*4 P.K. SCREW
4 REQ.
10202

FIG. 1
6 IN. = 1 FT.

PART No.	No. REQ.	SIZE	DESCRIPTION / MATERIAL
	28	3/32 x 3/16 L	2S ALUM. BR. HD. RIVET
	2	51 1/4 L	RUBBER EXTR. DIE *827 PURCH. B.F. GOODRICH CO.
#10-32	8	3/4 L	*1010 STL. CD. PLATED TRUSS HD. MACH. SCREW
#10-32	8	5/8 L	
10694-1	1		COWL MOUNTING BRACKET ASS'Y
10694	1		
#6-32	6	1/2 L	*1010 STL. CD. PLATED RD. HD. MACH. SCREW
	20		ELASTIC STOP NUT #22M62
	8		ELASTIC STOP NUT #22M02
	12		TINNERMAN NUT #A880-632-1
AN3-5	2		BOLT
#4	8	1/4 L	TYPE "A" STOVE HD. P.K. SCREW
#6-32	12	3/8 L	*1010 STL. CD. PLATED RD. HD. MACH. SCREW
#6-32	4	3/8 L	*1010 STL. CD. PLATED OVAL HD. MACH. SCREW
#10-32	2	1 1/8 L	*1010 STL. CD. PLATED FL. HD. MACH. SCREW
#10-32	4	3/4 L	
#10-32	16	5/8 L	
#6-32	10	1/2 L	
71891-1	1		ATTACHMENT ANGLE
71891	1		
10701-1	1		SIDE COWL ASS'Y
10701	1		
10699	1		TOP COWL
11495-3	1		BOTTOM COWL ASS'Y
10697	2		FILLER BLOCK
10696	2		COWL SUPPORT TUBE
11410	2		COWL SUPPORT TUBE
10695	2		COWL MOUNTING BRACKET ASS'Y
10466-5	2		CLAMP
10246	1		SPINNER ASS'Y
10202	2		COVER
10189	1		NOSE COWL ASS'Y
10079	2		NAME PLATE

SCALE 2 IN. = 1 FT. & NOTED | TOTAL WT.—LBS.
FINISH—PIPER SPECIFICATION #10
MANUFACTURING PRACTICES—PIPER SPECIFICATION #9

LET.	REVISION	DATE	BY
P	11495-3 WAS 10693	1-20-48	RC
O	AN3-5 WAS AN3-4; 11410 & ATT. & FIG. ADDED. SEC. J-J REV.	1-15-48	RC
N	SEC. L-L, FIG. 2 & EXTR. ADDED; 85662-23, 85662-24 & 85662-25 REM.	9-3-47	RC
M	#6-32 x 1/2 L RD. HD. MACH. SCR. WAS #6-32 x 3/8 L; 81342-16 REM.	4-11-47	CLW

LET.	REVISION	DATE	BY
L	85662-23, 85662-24 & 85662-25 ADD.	2-11-47	HMZ
K	A880-632-1 WAS #188-M-1	1-31-47	I.D.B.
J	8 #10-32 x 3/4 L. TRUSS HD. MACH. SCR. WAS #10-32 x 5/8 L. FL. HD.	11-19-46	HMZ
H	8 #10-32 x 5/8 L. TRUSS HD. MACH. SCR. WAS #10-32 x 5/8 FL. HD.	11-15-46	HMZ
G	10708 & ATTACH. REM.	10-31-46	I.M.
F	.141 HOLE REM. IN SEC. J-J	8-26-46	I.M.
E	2 ELASTIC STOP NUT #22M02 ADD.	7-19-46	BC
D	2 #10-32 x 5/8 L. MACH. SCR. ADD.	7-19-46	BC
C	VIEWS REVISED	7-19-46	BC
B	86092-19 REMOVED	7-19-46	BC
A	.141 HOLE NOTES ADD.	7-19-46	BC

THIS DRAWING IS THE PROPERTY OF THE PIPER AIRCRAFT CORP. AND ITS POSSESSION BY UNAUTHORIZED PERSONS SHALL NOT BE CONSTRUED AS PERMISSION TO REPRODUCE FOR SALE, IN WHOLE OR IN PART, ANY DEVICES SHOWN THEREON.

MODEL	PER PLANE	NEXT ASSEMBLY	SUPERSEDES	SUP. BY
J5C	1	75260	[illegible]	

PIPER AIRCRAFT CORP.
LOCK HAVEN, PENNA.

COWL INSTALLATION ~ ENGINE

DRAFTSMAN	CHECKER	STANDARDS
C.E.V. 6-17-46	R.E.T. 6-19-46	

10693